BRECO*flex* CO., L.L.C.

High Precision Drive Components

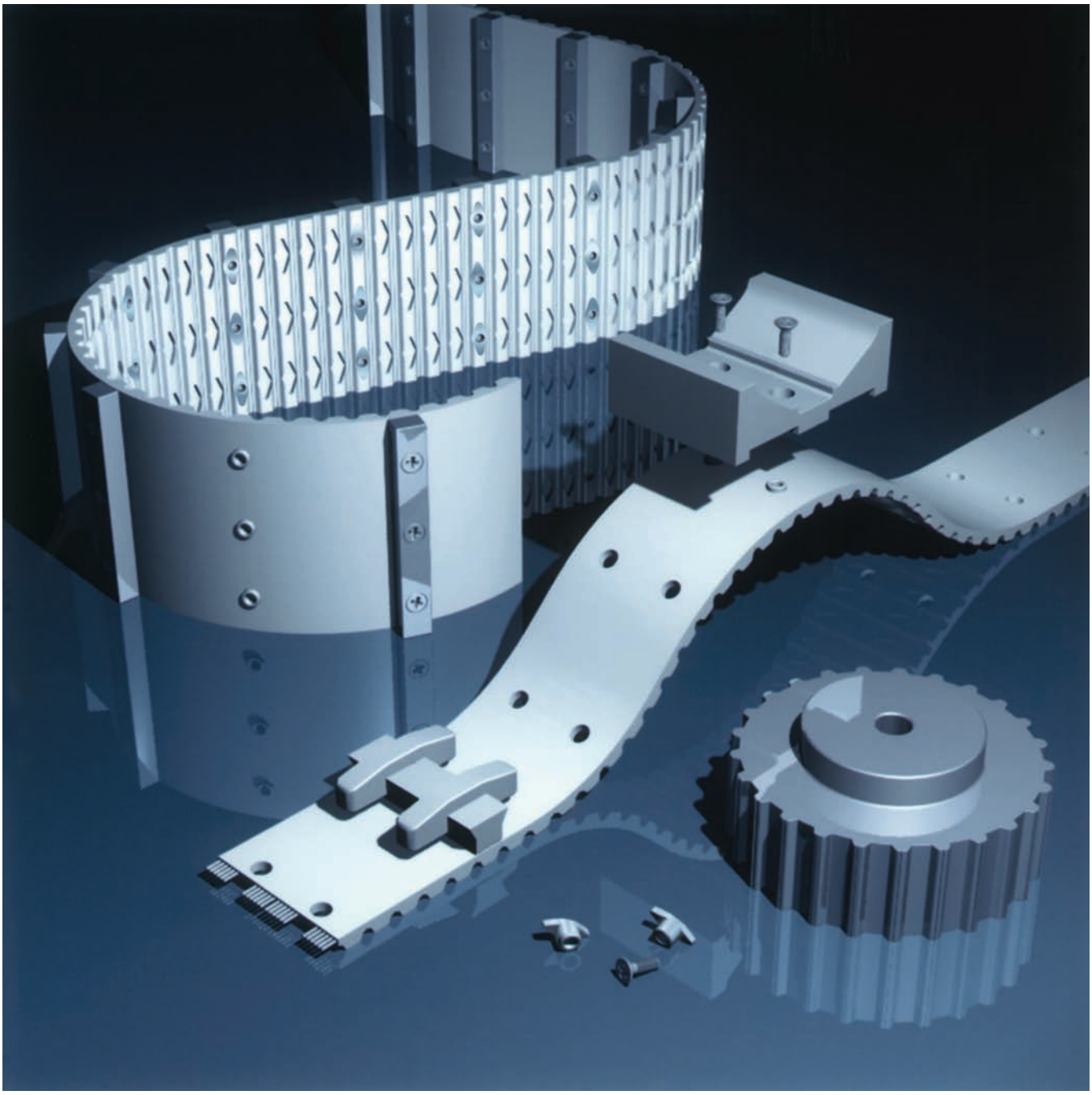

B209

ATN®-CONVERTIBLE TIMING BELT SYSTEM

ATN - CONVERTIBLE TIMING BELT SYSTEM

ATN® - THE SOLUTION FOR VARIABLE CONVEYOR SYSTEMS

BRECO*flex* CO., L.L.C., the world leader in the polyurethane timing belt industry, is setting new standards by offering new state-of-the-art drive components. BRECO*flex* CO., L.L.C. proudly offers the ATN convertible profile system.

This new technology provides for rapid and easy configuration of profiles with simple hand tools. By changing the profile location, different size goods, for instance, can be handled with the same base timing belt. A multitude of profiles can be attached, converted, interchanged, or reconfigured on the same base timing belt, either in-house or in the field at the customer site. ATN technology combines flexibility, strength, and accuracy and offers high precision profile positioning. The profiles are fastened to the timing belt by means of polyamide or brass inserts. Mounting holes (cavities) for the inserts are extruded into every tooth of the base timing belt, which guarantees accurate profile placement.

BRECO*flex* CO., L.L.C. designs and offers convertible profiles to suit the customer's specific applications. Users can create and assemble their own profiles for their specific needs.

It is the intention of BRECO*flex* CO., L.L.C. to provide customers with outstanding products and technical support to meet their expectations. BRECO*flex* CO., L.L.C. has developed many patented processes for producing a wide array of sophisticated, high precision timing belts. Worldwide, more OEMs specify BRECO*flex* CO., L.L.C. timing belts and drive components than any other brand.

ATN® ADVANTAGES

- The timing belt is part of a modular system
- Variable profile pitch
- Different profile materials can be utilized
- No belt disassembly is necessary to change profiles
- Alternative to chain with the advantages of a timing belt
- Standard timing belt pulleys can be used*
- High shear strength
- Quick and easy profile change
- Profile spacing is extremely precise
- Self-positioning of profiles
- Master profiles accept customer attachments
- No profile welding beads
- Standard AT tooth profiles
- Service friendly
- Reduced downtime

* For ATN 12.7, see chart on page 4, ATN Tooth Pitches and Tooth Profiles.

ATN® SYSTEM

ATN timing belts are available as open ended or welded endless belts. These timing belts are constructed of abrasion resistant polyurethane (Standard: 92 Shore A) and high strength steel or stainless steel tension members. Food grade, high ambient temperature, and cold - flexible polyurethane materials are available in all base belt versions. ATN timing belts are universally suitable for various positioning and conveying applications.

CHARACTERISTICS

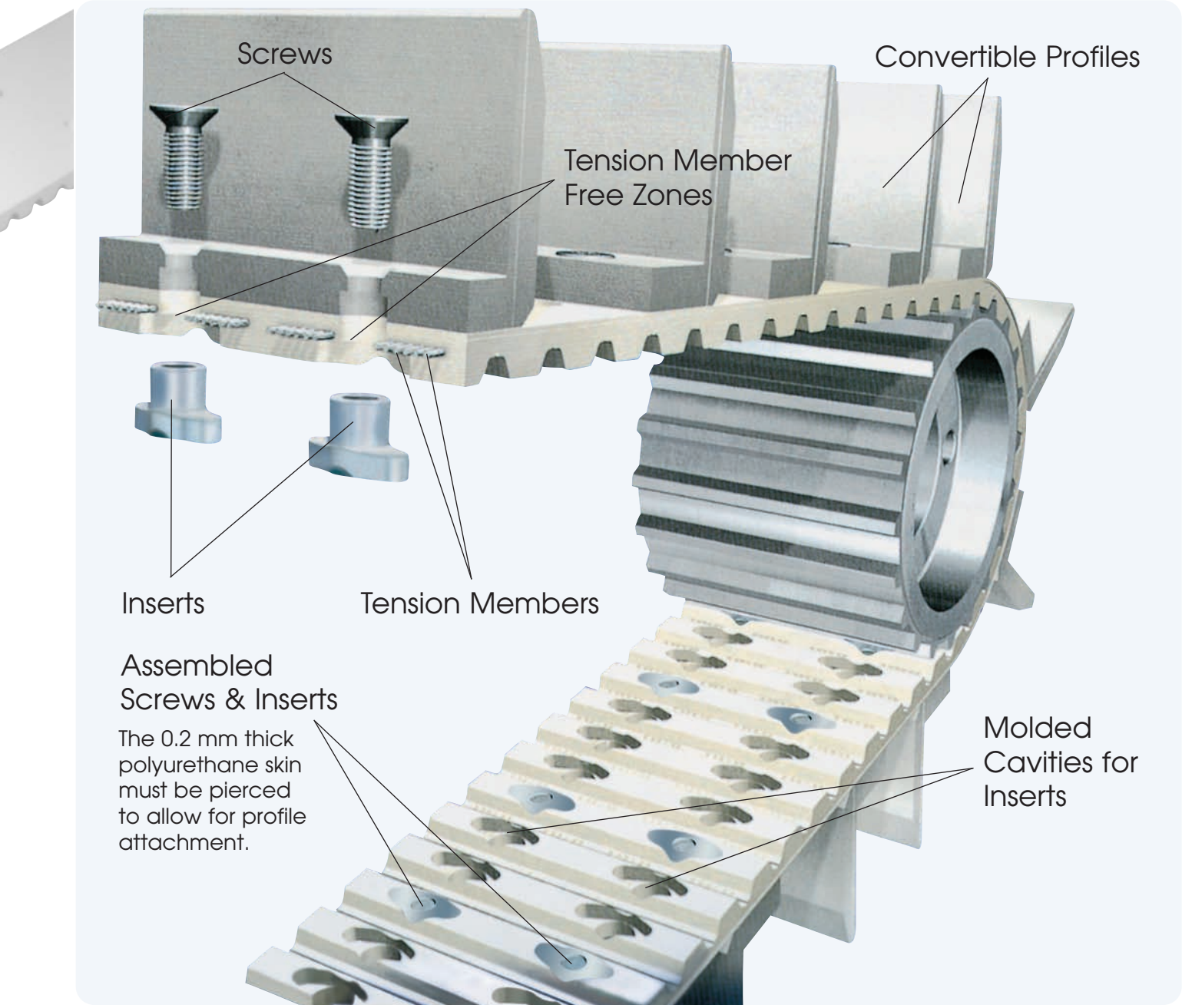

ATN - CONVERTIBLE TIMING BELT SYSTEM

PRODUCT RANGE

ATN Tooth Pitches and Tooth Profiles

ATN 10

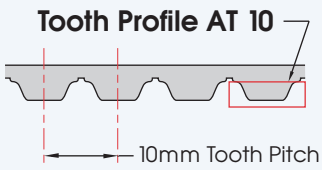

ATN 12.7

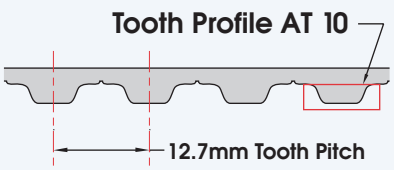

ATN 20

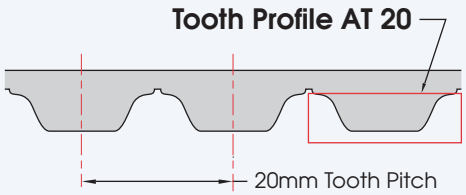

Standard ATN Timing Belt Versions

Belt Type	Tooth Profile	Pitch (mm)	Available Belt Width (mm)			
ATN 10	AT	10	25	50	75	100
ATN 12.7	AT	12.7	25	50	75	100
ATN 20	AT	20	-	50	75	100
No. of inserts per tooth			1	2	3	4

Self-Tracking ATN Timing Belt Versions (Tracking Guide - K)

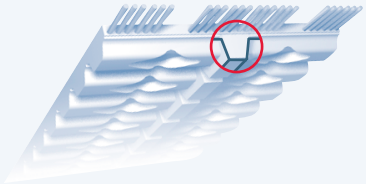

Available in ATN 10 K6 and ATN 12.7 K6

Timing Belt Widths and Self-Tracking Guide Positions

Belt Pitch \ Belt Width	50 mm	75 mm	100 mm
ATN 10 K6 - Tracking Guide Position	Symmetric	Asymmetric	Asymmetric
ATN 12.7 K6 - Tracking Guide Position	Symmetric	Asymmetric	Asymmetric

Measurements - ATN 10 K6 / ATN 12.7 K6

50 ATN 10 K6
50 ATN 12.7 K6

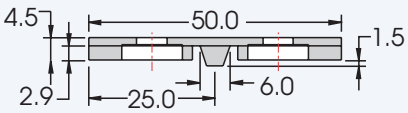

75 ATN 10 K6
75 ATN 12.7 K6

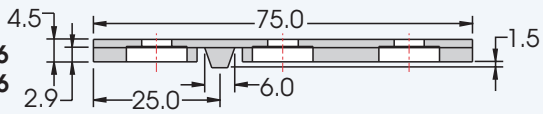

100 ATN 10 K6
100 ATN 12.7 K6

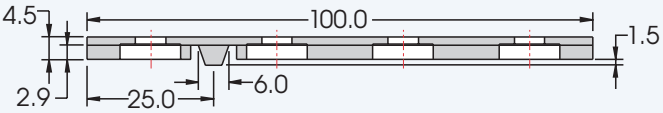

PRODUCT RANGE

Open Ended and Welded Endless Base Timing Belts

Open Ended (to be clamped) - code M

Welded Endless - code V

Belt Lengths for Open Ended (M) and Welded Endless (V)

Belt Pitch / Belt Version	Open Ended (M)	Welded Endless (V)
ATN 10 / ATN 12.7	Standard: 50 meter rolls Cut to length sizes available	Minimum length: 880 mm
ATN 20	Standard: 50 meter rolls Cut to length sizes available	Minimum length: 1000 mm

Available Belt Materials

Materials	TPU-ST1 Standard	TPU-ST2 Flexible at low temperature	TPU-KF1 Flexible at cold temperature	TPU-FDA1 Food Grade	TPU-WB High Temperature
Temperature Range	0°C to + 80°C +32° F to + 176° F	+ 5°C to + 50°C + 41° F to + 122° F	- 25°C to + 5°C - 13° F to + 41° F	0°C to + 80°C + 32° F to + 176° F	+ 20°C to + 110°C + 68° F to + 230° F
Durometer - Shore A	92	85	85	92	94

Mass in kg per Meter of Belt Length

	Standard Version				Self-Tracking — K Version		
Pitch / Width	25 mm	50 mm	75 mm	100 mm	50 mm	75 mm	100 mm
ATN 10	0.120	0.240	0.360	0.480	0.255	0.375	0.495
ATN 12.7	0.111	0.222	0.333	0.444	0.237	0.348	0.459
ATN 20	-	0.403	0.604	0.806	-	-	-

Note: Mass shown without inserts and screws

Available Nylon Facings

Tooth Side (PAZ), Belt Back (PAR), Both Sides (PAZ-PAR)

CAVITIES

Spacing of Molded Cavities for Inserts — Standard Version

Pitch	Distance A between cavities along belt length (every tooth)	Distance between cavities across belt width
ATN 10	10 mm	25 mm
ATN 12.7	12.7 mm	25 mm
ATN 20	20 mm	25 mm
ATN 10 K6	10 mm	25 mm
ATN 12.7 K6	12.7 mm	25 mm

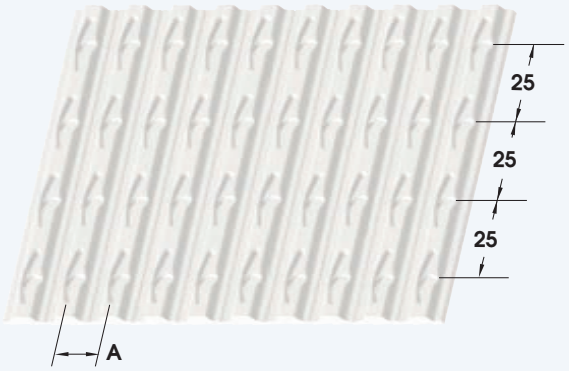

ORDERING EXAMPLE

50 ATN 10 / 12700 M PAZ
75 ATN 10 K6 / 12700 V PAR

- Width in mm
- Type
- Tooth Pitch
- Self-Tracking Guide
- Length in mm
- Open Ended Code "M"
- Spliced & Welded Endless Code "V"
- Optional Nylon Facing on Tooth Side
- Optional Nylon Facing on Belt Back

INSERTS

Fastening Measurements

ATN 10 / ATN 12.7

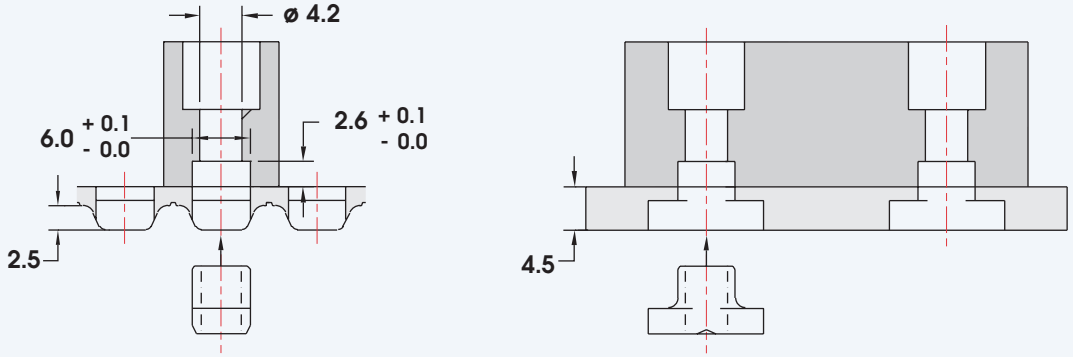

Fastening Measurements

ATN 20

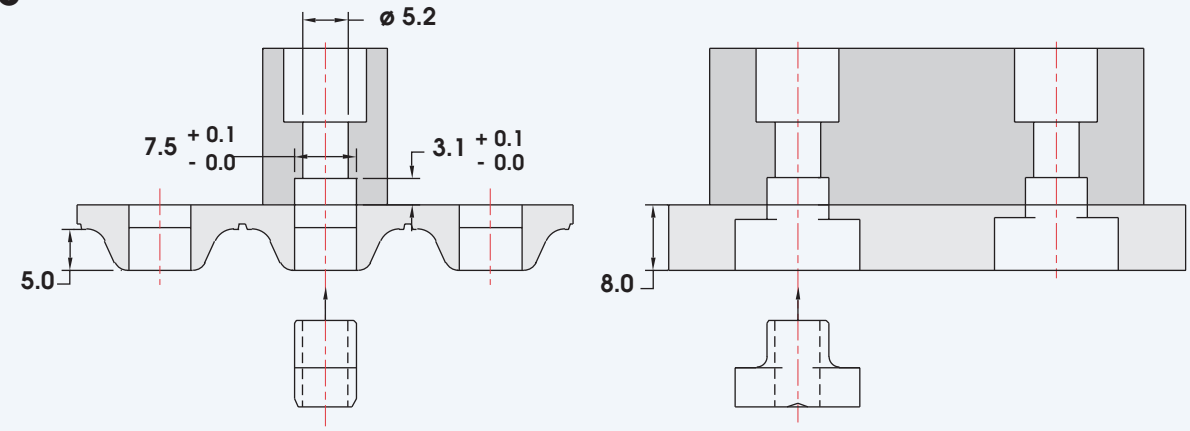

Insert Versions / Applications

Type	Material	Applications
Plastic	Polyamide	- small loads - normal temperatures - low dynamic loads
Brass	MS 58 F 36	- medium and large loads - low / high temperatures - higher dynamic loads
Stainless Steel	Stainless Steel	- medium and large loads - higher dynamic loads - FDA approved

Insert Versions / Belt Pitch

Plastic	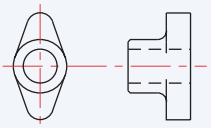 Order # BB4800001H per bag of 100 pcs.	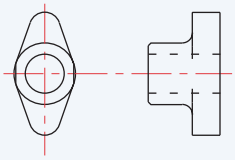 Order # BB4800003H per bag of 100 pcs.
Brass	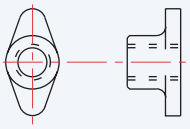 Order # BB4800002H per bag of 100 pcs.	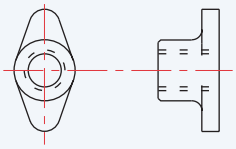 Order # BB4800004H per bag of 100 pcs.
Stainless Steel	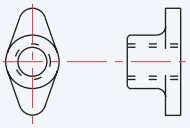 Order # BB4800030H per bag of 100 pcs.	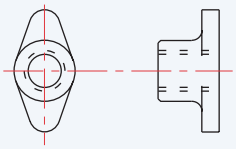 Order # BB4800031H per bag of 100 pcs.

Maximum Screw Tightening Torque In Ncm

Insert Version	Belt Pitch	Profile Material		
		TPU 790	Polyamide	Metal
Plastic	ATN 10 /ATN 12.7 ATN 20	50 Ncm 80 Ncm	70 Ncm 100 Ncm	70 Ncm 100 Ncm
Brass	ATN 10 /ATN 12.7 ATN 20	- -	100 Ncm 150 Ncm	100 Ncm 150 Ncm
Stainless Steel	ATN 10 /ATN 12.7 ATN 20	- -	100 Ncm 150 Ncm	100 Ncm 150 Ncm

SCREWS

Screw Length - L / Profile Height - H

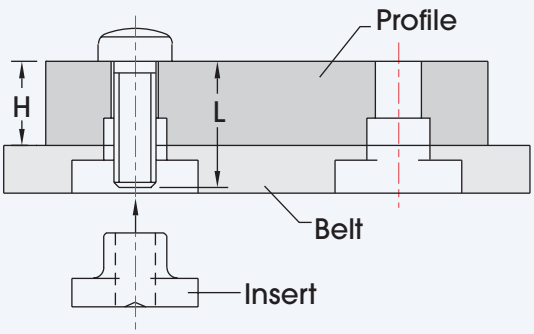

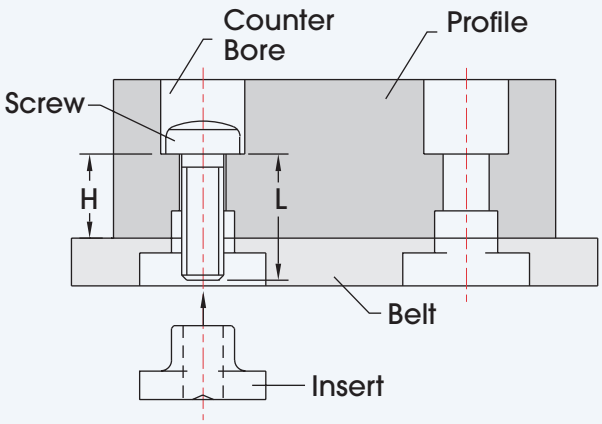

Note: Screws should not protrude beyond the inserts when assembled!

SCREWS

ATN Mounting Screws — Steel Zinc Plated

Belt Pitch / Insert Version	ATN 10 / ATN 12.7				ATN 20			
Plastic	Thread Forming				Thread Forming			
	Screw Type	Screw Length-L	Profile Height-H	Order Number*	Screw Type	Screw Length-L	Profile Height-H	Order Number*
	Z 40 x 8	8 mm	4 mm	BB4800006H	Z 50 x 12	12 mm	5 mm	BB4800009H
	Z 40 x 12	12 mm	8 mm	BB4800007H	Z 50 x 16	16 mm	9 mm	BB4800010H
	Z 40 x 16	16 mm	12 mm	BB4800008H	Z 50 x 20	20 mm	13 mm	BB4800011H
	* per bag of 100 pcs				* per bag of 100 pcs			
Brass	Threaded				Threaded			
	Screw Type	Screw Length-L	Profile Height-H	Order Number*	Screw Type	Screw Length-L	Profile Height-H	Order Number*
	M 4 x 8	8 mm	4 mm	BB4800013H	M 5 x 12	12 mm	5 mm	BB4800016H
	M 4 x 12	12 mm	8 mm	BB4800014H	M 5 x 16	16 mm	9 mm	BB4800017H
	M 4 x 16	16 mm	12 mm	BB4800015H	M 5 x 20	20 mm	13 mm	BB4800018H
	* per bag of 100 pcs				* per bag of 100 pcs			
Stainless Steel	Threaded				Threaded			
	Screw Type	Screw Length-L	Profile Height-H	Order Number*	Screw Type	Screw Length-L	Profile Height-H	Order Number*
	M 4 x 12	12 mm	8 mm	BB4800023H	M 5 x 16	16 mm	9 mm	BB4800024H
	* per bag of 100 pcs				* per bag of 100 pcs			

HAND PIERCING TOOLS

The base timing belt is extruded with a 0.2 mm thick polyurethane skin across the cavities. This skin must be pierced through to allow for profile attachment. ATN timing belts can be ordered from BRECO*flex* Co., L.L.C. with pierced holes (hole pattern must be specified). In order to pierce holes at the customer site, the following tools are available.

Piercing Tools

Belt Pitch	Punch Tool Version	Order Number
ATN 10 / ATN 12.7	6 mm	BB4800020H
ATN 20	7.5 mm	BB4800021H

Base Timing Belt

Polyurethane Skin

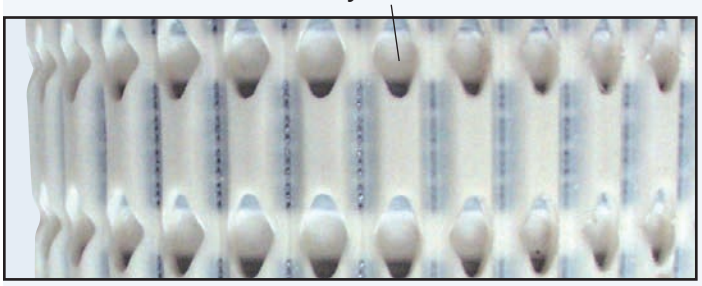

Piercing Tools for

ATN 20

ATN 10 / ATN 12.7

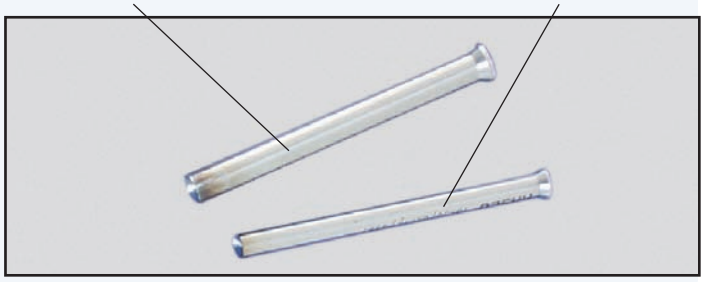

STRENGTH CALCULATION

Profile Connection

$$F_{ZN} \leq F_{ZN\ zul}$$

F_{ZN} is the sum of all forces acting on each insert including applied, inertial, and centrifugal forces. These forces must be converted to equivalent normal forces (perpendicular to the belt surface) and added in order to compare against the values in the following table. (Allowable Force ($F_{ZN\ zul}$) per Insert in N).

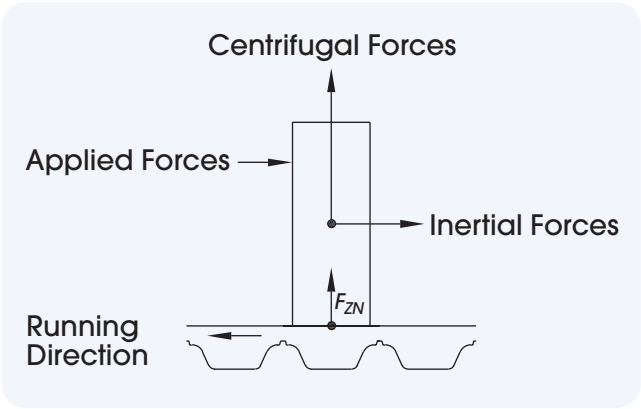

Allowable Force ($F_{ZN\ zul}$) per Insert in N (Perpendicular to Belt Surface)

		Profile Material	
Version	**Pitch**	**Polyamide**	**Metal**
Plastic	ATN 10 /ATN 12.7 ATN 20	100 N 160 N	100 N 160 N
Brass	ATN 10 /ATN 12.7 ATN 20	170 N 240 N	320 N 490 N
Stainless Steel	ATN 10 /ATN 12.7 ATN 20	170 N 240 N	320 N 490 N

Centrifugal Forces - A force normal to the belt surface during circular motion as a result of centripetal acceleration. This force is dependent upon the profile and attachment mass, the path radius at the profile center of mass, and the pulley RPM.

Applied Forces - External forces on the profile due to the force from accelerating or supporting transported goods. Acceleration forces are dependent upon the mass of the goods and the magnitude of the acceleration. An example of an applied force is the force due to the weight of goods in vertical transport applications.

Inertial Forces - The resistive force exerted by the profile and attachments under acceleration and deceleration.

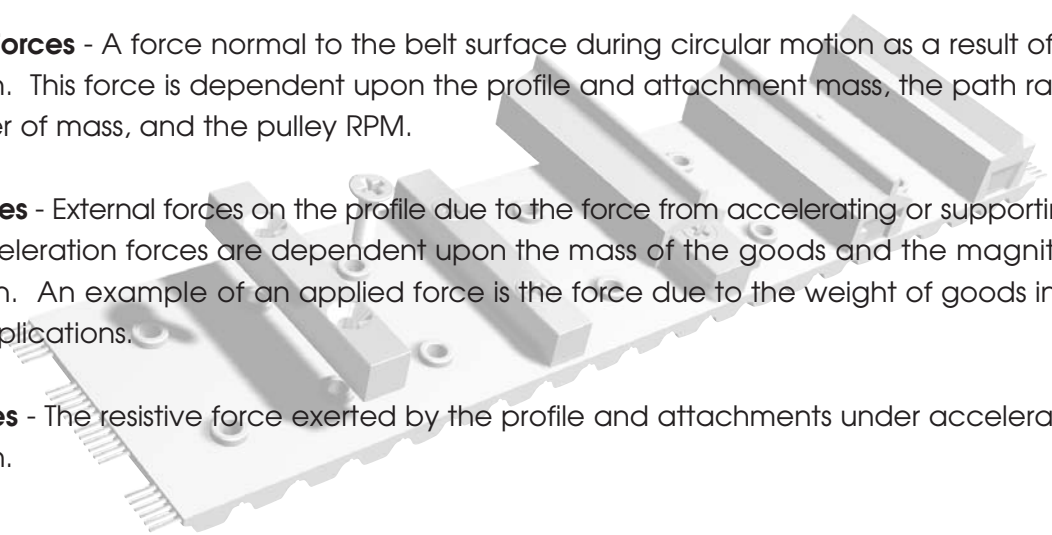

STRENGTH CALCULATION

Strength Calculation Method for Profile Design

1. **For precise strength calculation, please call BRECO*flex* Applications Engineering.**

2. **For basic, approximate strength calculation, the following method can be used:**

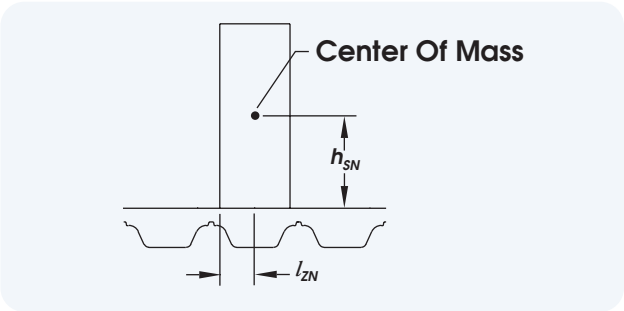

2.1 Defining the profile center mass height (h_{SN})

2.2 Graphs 1, 2 and 3 show the allowable center mass height of the profile for a given drive speed, profile mass, and pulley diameter. Select the particular graph based on the closest pulley pitch diameter of the smallest pulley in the drive set-up. Interpolate graph results for more accuracy.

2.3 Graphs are based on the following parameters:

- Belt version = 50 ATN 10 / ATN 12.7
- Symmetric profile support with l_{ZN} = 10 mm
- Plastic inserts with polyamide or metal profiles

Graph 1:
Pulley Pitch Diameter d_O = 79.58 mm

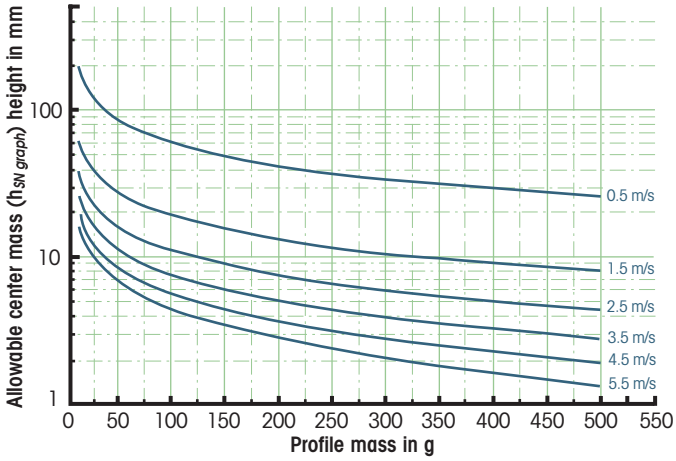

Graph 2:
Pulley Pitch Diameter d_O = 127.32 mm

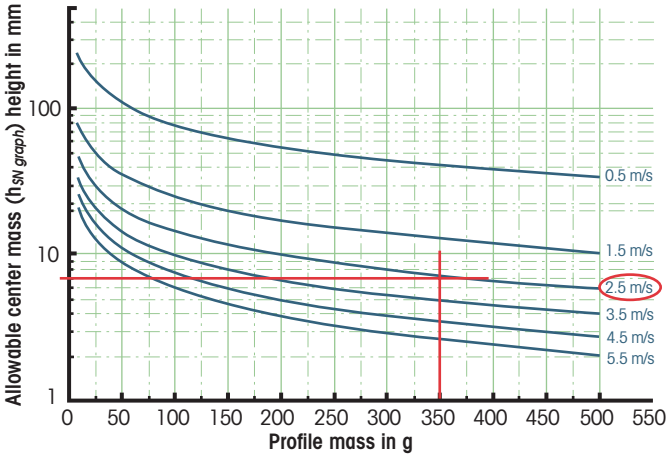

Graph 3:
Pulley Pitch Diameter d_O = 190.99 mm

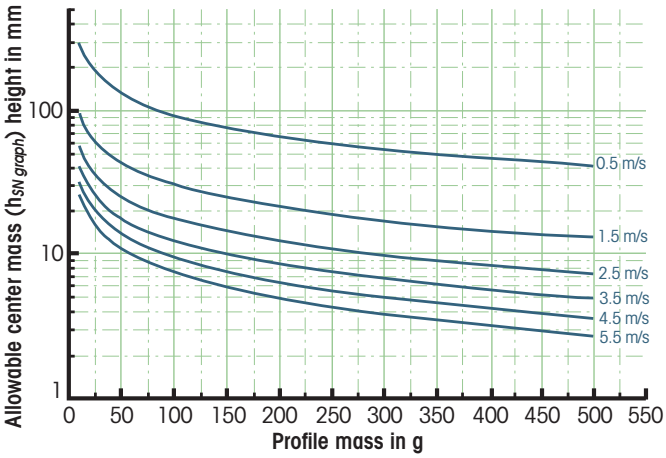

STRENGTH CALCULATION

Strength Calculation Method for Profile Design

2.4 Calculation Example (no correction factors necessary)

2.4.1 Parameters

- Belt version = 50 ATN 10
- Pulley pitch diameter d_O = 127.32 mm
- Drive speed v = 2.5 m/s
- Profile mass m_N = 350 g
- Profile support with l_{zn} = 10 mm
- Insert / profile material = polyamide / metal

Solution:

Use Graph 2 (see page 11) to obtain allowable profile mass height ($h_{SN\ graph}$ = approx. 7 mm).

Note:

For this example, no correction factors are necessary, therefore, $h_{SN\ graph} = h_{SN\ zul}$.

$$h_{SN\ zul} = 7\ mm$$

Allowable profile center of mass height ($h_{SN\ zul}$) 7 mm should not be exceeded.

2.5 Correction factors B, N_s, and M defined to calculate $h_{SN\ zul}$ for other configurations:

$$h_{SN\ zul} = h_{SN\ graph}\ (B \cdot N_S \cdot M)$$

2.5.1 **Belt Width Factor (B)**

Belt Width	Correction Factor B
25 mm	0.7
50 mm	1.0
75 mm	1.2
100 mm	1.4

2.5.2 **Symmetric Profile Support Width Factor (N_S)**

$$N_S = \sqrt{\frac{0.1 \cdot l_{ZN}\ mm}{mm}}$$

2.5.3 **Insert - Profile Material Factor (M)**

	Insert Material	Profile Material	Correction Factor (M)
ATN 10 ATN 12.7	Polyamide	TPU 790	0.6
	Polyamide	Polyamide/Metal	1.0
	Brass	Polyamide	1.3
	Brass	Metal	1.8
	Stainless Steel	Polyamide	1.3
	Stainless Steel	Metal	1.8
ATN 20	Polyamide	Polyamide / Metal	1.3
	Brass	Polyamide	1.5
	Brass	Metal	2.2
	Stainless Steel	Polyamide	1.5
	Stainless Steel	Metal	2.2

STRENGTH CALCULATION

2.6 Calculation Example (correction factors necessary)

2.6.1 Parameters

- Belt version = 75 ATN 10
- Pulley pitch diameter d_O = 134 mm
- Drive speed v =2.5 m/s
- Profile mass m_N = 350 g
- Profile support width l_{ZN} = 15 mm
- Insert / profile material = brass / metal

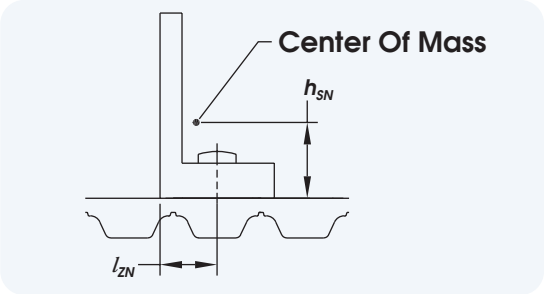

Solution:

Use Graph 2 (see page 11) to obtain allowable profile mass height ($h_{SN\ graph}$).
Determine correction factors B, N_S and M to calculate $h_{SN\ zul}$.

$$h_{SN\ zul} = h_{SN\ graph}\ (B \cdot N_S \cdot M)$$

$$h_{SN\ zul} = 7\ \text{mm}\left(1.2 \cdot \sqrt{\frac{0.1 \cdot 15\ \text{mm}}{\text{mm}}} \cdot 1.8\right)$$

$$h_{SN\ zul} = 18.5\ \text{mm}$$

Allowable profile center of mass height ($h_{SN\ zul}$) 18.5 mm should not be exceeded.

STRENGTH CALCULATION

TOOTH SHEAR STRENGTH

Peripheral Force Calculation

The peripheral force (F_U) is based on the specific peripheral force ($F_{U\ spez}$) and the number of teeth in mesh (Z_e) on the drive pulley. Z_e max = 12 teeth for open-ended belts. Z_e max = 6 teeth for welded endless belts.

$$F_U = F_{U\ spez} \cdot Z_e$$

F_U = Peripheral Force in N

$$F_{U\ spez} = \frac{F_U}{Z_e}$$

$F_{U\ spez}$ = Specific Peripheral Force in N per Tooth in Mesh
(Charts below show the different values for each belt width.)

$$Z_e = \frac{F_U}{F_{U\ spez}}$$

Z_e = Number of Teeth in Mesh

Specific Peripheral Force ($F_{U\ spez}$) per One Tooth in Mesh in N

ATN 10 / ATN 12.7

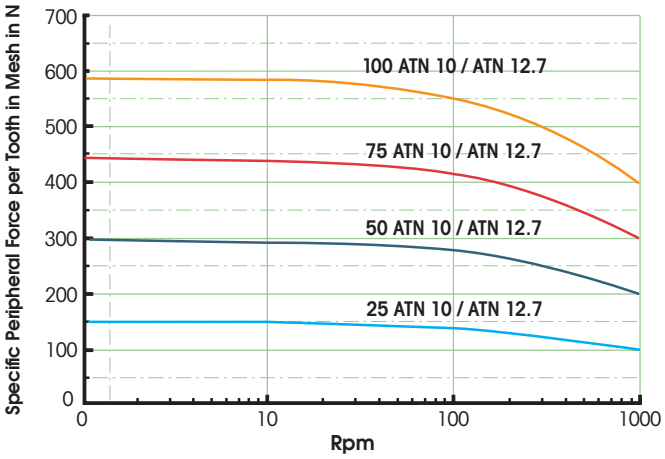

ATN 20

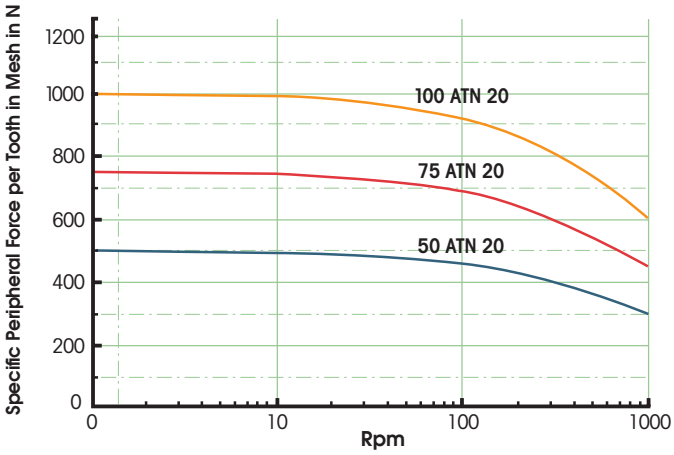

SELF-TRACKING ATN TIMING BELT VERSIONS (TRACKING GUIDE – K)

Comparison - Specific Peripheral Force per Tooth in Mesh

Self-Tracking Versions	$F_{U\ spez}$ compared to standard ATN 10 / ATN 12.7
50 ATN 10 K6 / ATN 12.7 K6	-20%
75 ATN 10 K6 / ATN 12.7 K6	-13%
100 ATN 10 K6 / ATN 12.7 K6	-10%

TENSILE STRENGTH

Open Ended ATN Timing Belts — M
Allowable Tensile Load of Belt Cross Section, F_{zul} in N

Belt Pitch \ Belt Width	25 mm	50 mm	75 mm	100 mm
ATN 10	3000	6000	9000	12000
ATN 12.7	3000	6000	9000	12000
ATN 20	-	8000	12000	16000

Welded Endless ATN Timing Belts - V
Allowable Tensile Load of Belt Cross Section, F_{zul} in N

Belt Pitch \ Belt Width	25 mm	50 mm	75 mm	100 mm
ATN 10	1000	2000	3000	4000
ATN 12.7	1000	2000	3000	4000
ATN 20	-	2700	4000	5400

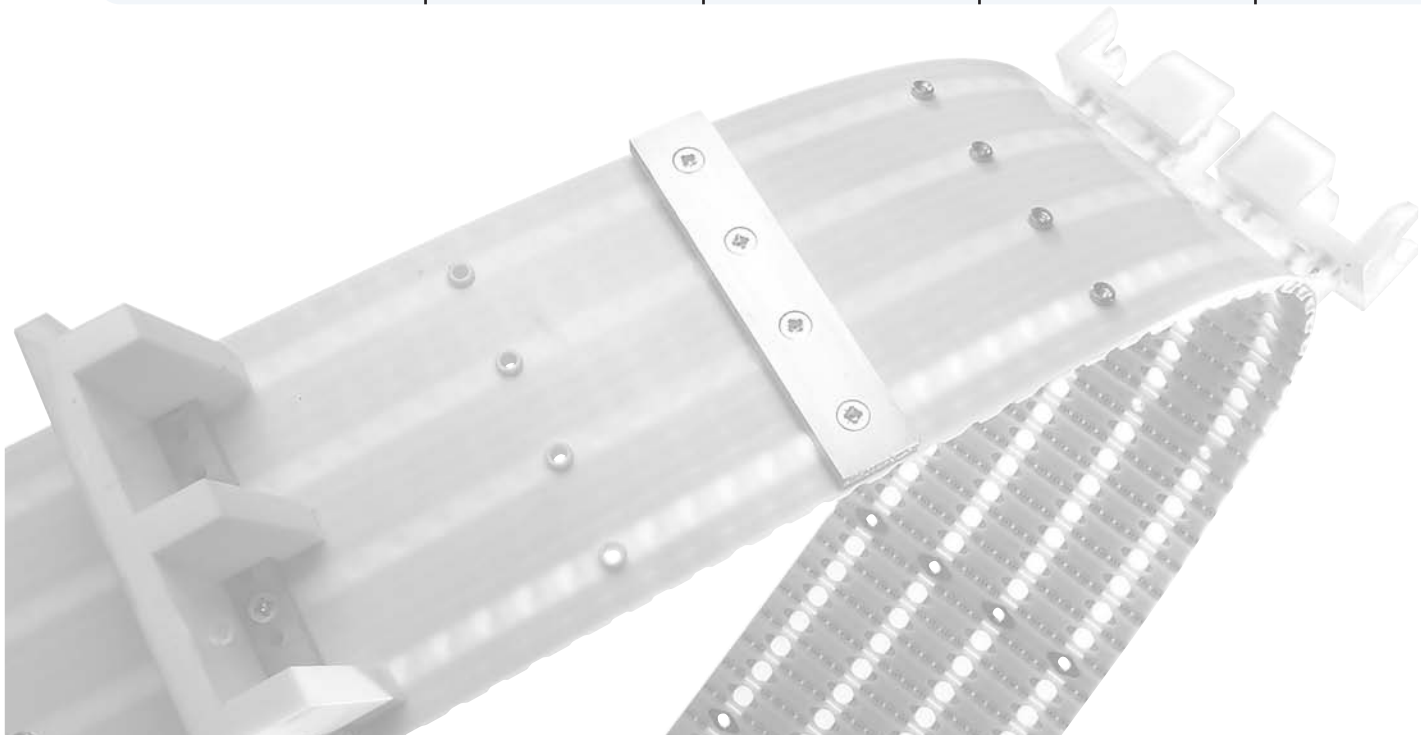

STANDARD PROFILES

ATN - Standard Adapter Profiles

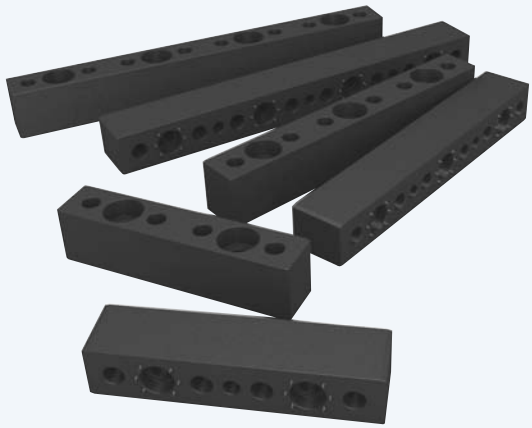

Attaching profiles to the ATN Timing belt can be accomplished in two ways. Profiles can either be screwed onto an adapter profile or screwed directly to the belt. Using an adapter is necessary when it is not possible to screw the profile directly to the belt.

The adapters shown provide a secure attachment for profiles to be either screwed on or slid on (e.g. T-Slot, dovetail). That way, a quick and easy way to replace or change profiles is possible.

The adapters do not have to be replaced when changing profiles.

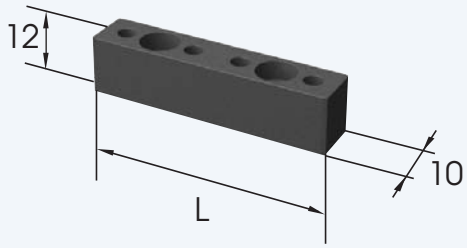

R-Profile

Profile Type	Profile Length L	Profile Number
R-Profile	50 mm	1.001.008
R-Profile	75 mm	1.001.009
R-Profile	100 mm	1.001.010

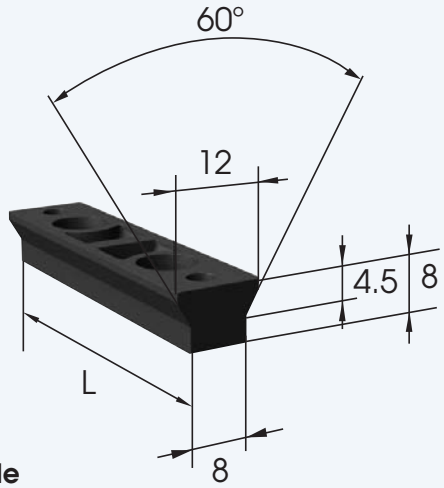

Y-Profile

Profile Type	Profile Length L	Profile Number
Y-Profile	50 mm	1.001.002
Y-Profile	75 mm	1.001.003
Y-Profile	100 mm	1.001.004

STANDARD PROFILES

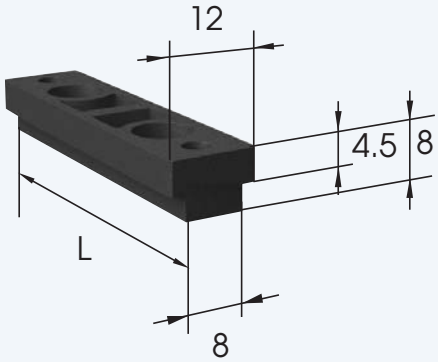

T-Profile

Profile Type	Profile Length L	Profile Number
T-Profile	50 mm	1.001.005
T-Profile	75 mm	1.001.006
T-Profile	100 mm	1.001.007

ATN - Custom Profile Examples

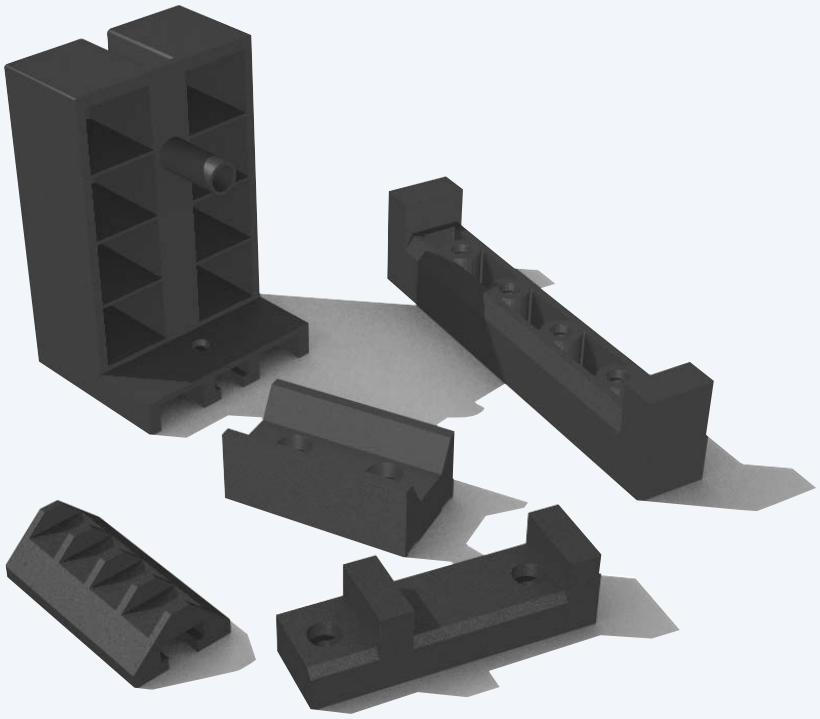

The profiles shown are a few examples of already existing custom ATN profiles.

BRECO*flex* CO., L.L.C. has the know-how and technical capabilities to provide the perfect profile solution for your conveying application.

Please contact Applications Engineering for custom ATN profiles.

ATN - CONNECTING KIT FOR FIELD ASSEMBLY

This mechanical connection is designed for rapid belt assembly and disassembly in the field directly on the drive system. The finger spliced ends of the timing belt are prepared to be clamped together with special clamping hardware. The hardware consists of high strength polyamide inserts, high grade steel plates, and the requisite screws. This connection technology allows ATN profiles to be attached even in the joined area. Profiles for the joined area may have to be modified.

Prepared Finger Spliced Timing Belt Ends

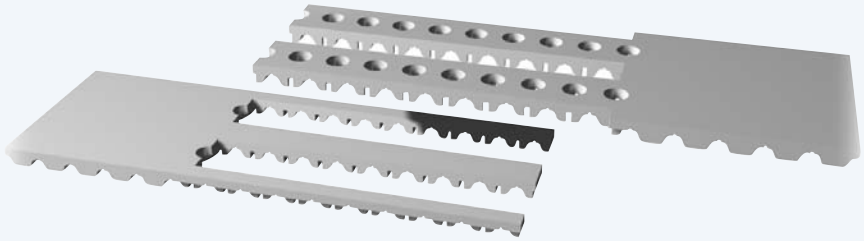

Assembly — Connection Method

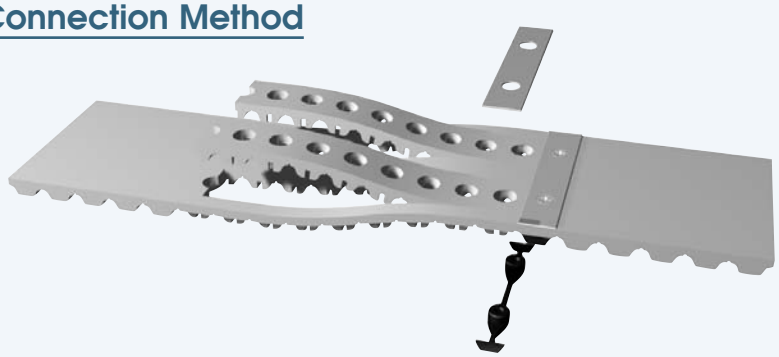

Completed Connection (Endless Belt)

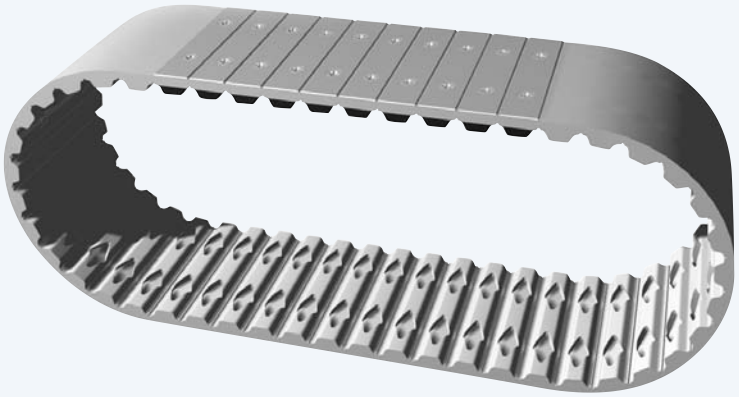

ATN - CONNECTING KIT FOR FIELD ASSEMBLY

Connection Parts: Features / Specifications

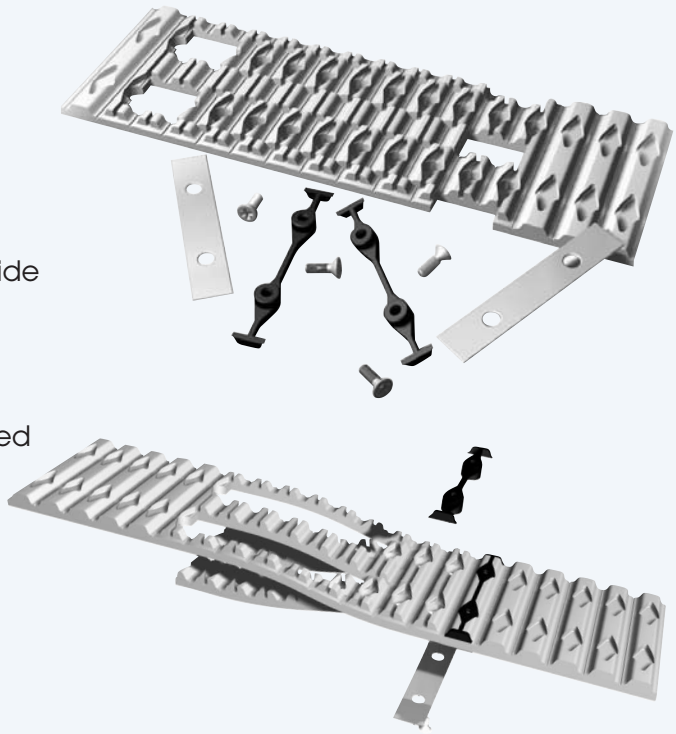

Number of connection elements per connection:	10
Insert material:	high strength polyamide
Connection plates:	high grade steel, hardened and polished
Connection plate thickness:	0.9 mm
Mounting screws:	M 2.5

Note: Customized belt version with recessed connection plates for level conveying surface available

Allowable Tensile Load (F_{zul} in N)

Belt Pitch \ Belt Width	50 mm	75 mm	100 mm
ATN 10 / ATN 10 K6	750 N	1150 N	1500 N
ATN 12.7 / ATN 12.7 K6	750 N	1150 N	1500 N
ATN 20	1000 N	1500 N	2000 N

Minimum Number of Pulley Teeth Required (for clamped belts)

Belt Pitch	Z min
ATN 10 ATN 10 K6	25
ATN 12.7 ATN 12.7 K6	20

ATN CONNECTING KIT VERSIONS

Version “C” (standard)

- Available for ATN 10, ATN 12.7, ATN 10 K6 and ATN 12.7 K6
- Belt thickness (without self-tracking guide):
  4.5 mm (standard thickness)
- Number of connection elements per connection:
  10
- Not suitable for mounting of profiles in connecting kit area

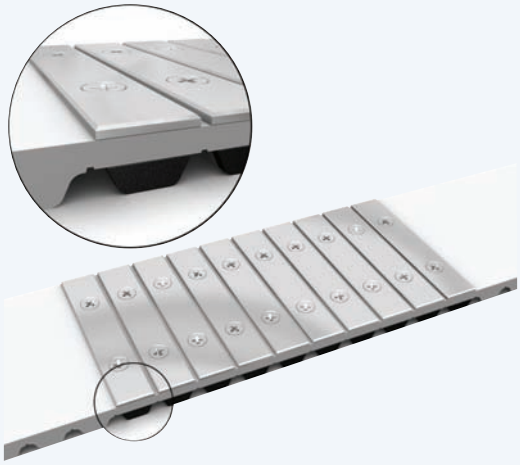

Version “DC” (deep connection)

- Available for ATN 10, ATN 12.7, ATN 20, ATN 10 K6 and ATN 12.7 K6
- Belt thickness (without self-tracking guide):
  5.4 mm (ATN 10, ATN 12.7)
  8.0 mm (ATN 20)
- Number of connection elements per connection:
  10 (ATN 10, ATN 12.7)
  9 (ATN 20)
- Not suitable for mounting of profiles in connecting kit area

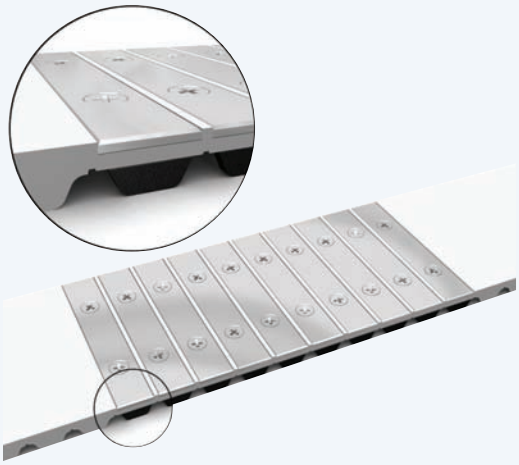

Version “DC-PRO” (deep connection for profiles)

- Available for ATN 10, ATN 12.7, ATN 20, ATN 10 K6 and ATN 12.7 K6
- Belt thickness (without self-tracking guide):
  5.4 mm (ATN 10, ATN 12.7)
  8.0 mm (ATN 20)
- Number of connection elements per connection:
  10 (ATN 10, ATN 12.7)
  9 (ATN 20)
- Suitable for mounting of profiles in connecting kit area

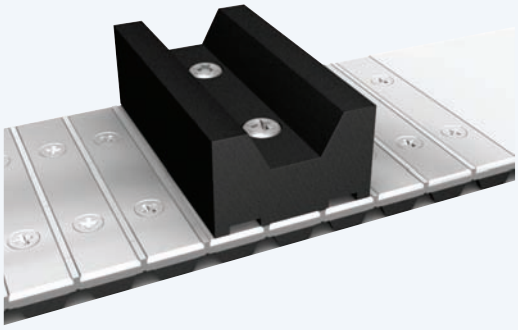

ATN CONNECTING KIT VERSIONS

Availability

Connecting Kit Version	ATN 10	ATN 12.7	ATN 20	ATN 10 K6	ATN 12.7 K6
C	●	●	–	●	●
DC	●	●	●	●	●
DC-PRO	●	●	●	●	●

Connecting Kits for Belt Widths	ATN 10	ATN 12.7	ATN 20	ATN 10 K6	ATN 12.7 K6
25	–	–	–	–	–
50	●	●	●	●	●
75	●	●	●	●	●
100	●	●	●	●	●

Ordering Example (for Timing Belt prepared for Connecting Kit)

Timing Belt 50 ATN 10 / 5400 DC

- Width in mm — 50
- Type — ATN
- Tooth Pitch — 10
- Length in mm — 5400
- Connecting Kit Version "C", "DC", or "DC-PRO" — DC

Ordering Example (Connecting Kit)

ATN Connecting Kit 50 ATN 10 DC

- Width in mm — 50
- Type — ATN
- Tooth Pitch — 10
- Connecting Kit Version "C", "DC", or "DC-PRO" — DC

ALUMINUM PULLEYS

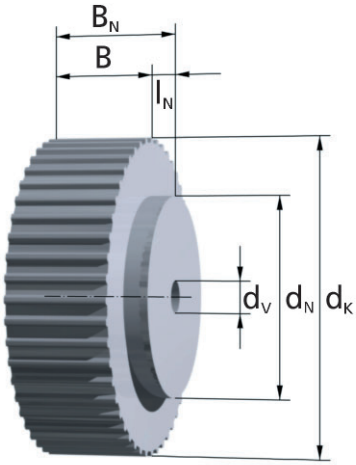

Type - 0

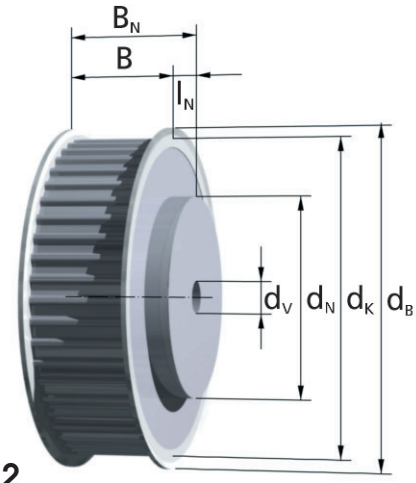

Type - 2

Tooth Type	# of Teeth	Outside Diameter	Pitch Diameter	Flange Diameter	Face Width	Pulley Width	Pilot Bore	Hub Size	Part Number
ATN 10	z	d_K	d_O	d_B	B	B_N	d_V	d_N X l_N	
BELT WIDTH = 25 mm	25	77.75	79.58	82	32	42	12H7	60 x 10	LS 42 AT 10 / 25 - 2 hub 60 x 10
	27	84.10	85.95	90	32	42	12H7	60 x 10	LS 42 AT 10 / 27 - 2 hub 60 x 10
	30	93.65	95.49	99	32	42	12H7	60 x 10	LS 42 AT 10 / 30 - 2 hub 60 x 10
	32	100.00	101.86	105	32	42	12H7	65 x 10	LS 42 AT 10 / 32 - 2 hub 65 x 10
	36	112.75	114.59	118	32	42	16H7	70 x 10	LS 42 AT 10 / 36 - 2 hub 70 x 10
	40	125.45	127.32	131	32	42	16H7	80 x 10	LS 42 AT 10 / 40 - 2 hub 80 x 10
	44	138.20	140.05	144	32	42	16H7	90 x 10	LS 42 AT 10 / 44 - 2 hub 90 x 10
	48	150.95	152.78	-	32	42	16H7	95 x 10	LS 42 AT 10 / 48 - 0 hub 95 x 10
	60	189.10	190.98	-	32	42	16H7	110 x 10	LS 42 AT 10 / 60 - 0 hub 110x10
ATN 10	z	d_K	d_O	d_B	B	B_N	d_V	d_N X l_N	
BELT WIDTH = 50 mm	25	77.75	79.58	82	60	70	12H7	60 x 10	LS 70 AT 10 / 25 - 2 hub 60 x 10
	27	84.10	85.95	90	60	70	12H7	60 x 10	LS 70 AT 10 / 27 - 2 hub 60 x 10
	30	93.65	95.49	99	60	70	12H7	60 x 10	LS 70 AT 10 / 30 - 2 hub 60 x 10
	32	100.00	101.86	105	60	70	12H7	65 x 10	LS 70 AT 10 / 32 - 2 hub 65 x 10
	36	112.75	114.59	118	60	70	16H7	70 x 10	LS 70 AT 10 / 36 - 2 hub 70 x 10
	40	125.45	127.32	131	60	70	16H7	80 x 10	LS 70 AT 10 / 40 - 2 hub 80 x 10
	44	138.20	140.05	144	60	70	16H7	90 x 10	LS 70 AT 10 / 44 - 2 hub 90 x 10
	48	150.95	152.78	-	60	70	16H7	95 x 10	LS 70 AT 10 / 48 - 0 hub 95 x 10
	60	189.10	190.98	-	60	70	16H7	110 x 10	LS 70 AT 10 / 60 - 0 hub 110x10

Note: Pulleys listed are stock items. **All dimensions in millimeters (mm).**

Tooth Type	# of Teeth	Outside Diameter	Pitch Diameter	Flange Diameter	Face Width	Pulley Width	Pilot Bore	Hub Size	Part Number
ATN 12.7 ATN 20	z	d_K	d_O	d_B	B	B_N	d_V	d_N X l_N	Custom – Please call for technical assistance.

Note: H (T1/2") pitched pulleys are not compatible with ATN 12.7 belts. See page 4 for drawings of ATN tooth pitches and tooth profiles.

ALUMINUM BAR STOCK

Tooth Type	# of Teeth	Face Width	Outside Diameter	Pitch Diameter	Part Number
	z	B	d_k	d_o	
ATN 10	25	180	77.67	79.58	Al 180 AT 10 / 25 - 0
ATN 10	27	180	84.12	85.94	Al 180 AT 10 / 27 - 0
ATN 10	30	180	93.67	95.49	Al 180 AT 10 / 30 - 0
ATN 10	32	180	100.04	101.86	Al 180 AT 10 / 32 - 0
ATN 10	40	180	125.50	127.32	Al 180 AT 10 / 40 - 0
ATN 12.7	20	220	79.03	80.85	Al 220 ATN 12.7 / 20 - 0
ATN 12.7	24	220	95.20	97.02	Al 220 ATN 12.7 / 24 - 0
ATN 12.7	32	220	127.54	129.36	Al 220 ATN 12.7 / 32 - 0
ATN 12.7	36	220	143.71	145.53	Al 220 ATN 12.7 / 36 - 0

Minimum Pulley Sizes

Belt Pitch	Minimum Number of Teeth — z_{min}
ATN 10	25
ATN 12.7	20
ATN 20	20

Belt Drive with Flat Idler Running on Tooth Side

Belt Pitch	Minimum Diameter
ATN 10	80 mm
ATN 12.7	80 mm
ATN 20	130 mm

ORDERING EXAMPLE

LS 70 AT 10 / 44 - 2 hub 90 x 10 d_v=12

- Stock Pulley — LS
- Width Over Hub B_N — 70
- Type — AT
- Tooth Pitch — 10
- Number of Teeth — 44
- Number of Flanges — 2
- Hub Size — hub 90 x 10
- Pilot Bore — d_v=12

SELF-TRACKING PULLEYS

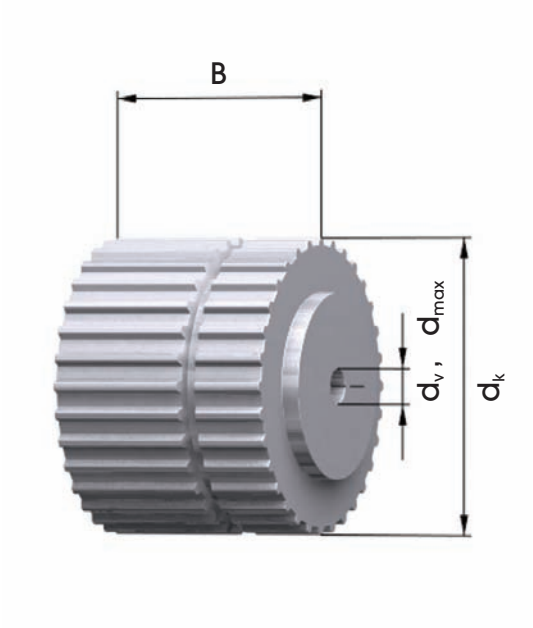

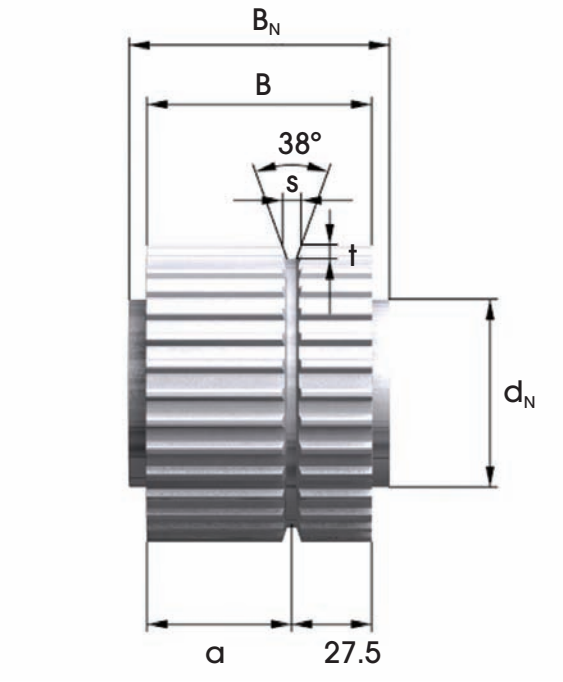

Self-Tracking Pulleys for ATN 10 K6 and ATN 12.7 K6

Belt Pitch	b [mm]	50	75	100
Pulley Face Width	B [mm]	55	80	105
Pulley Width over Hub	B_N [mm]	65	90	115
Toothed Width	a [mm]	27.5	52.5	77.5
Groove Width	s [mm]	6.5	6.5	6.5
Groove Depth	t [mm]	5	5	5

ORDERING EXAMPLE

Al 70 ATN 10 K6 / 44 - 0 hub 90 x10 d_v = 12

- Aluminum Pulley — Al
- Width Over Hub B_N — 70
- Type — ATN
- Tooth Pitch — 10
- Self-Tracking Groove K6 — K6
- Number of Teeth — 44
- Number of Flanges — 0
- Hub Size — hub 90 x10
- Pilot Bore — d_v = 12

ATN - SLIDER BEDS

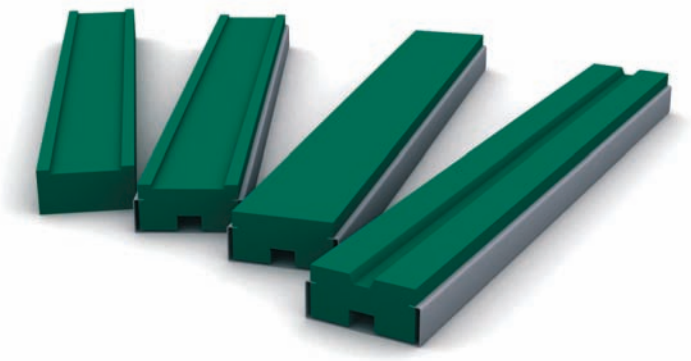

Slider beds are utilized to support the timing belt and the product to be conveyed. Depending on the functional requirements, slider beds are available with or without edge guiding or self-tracking groove.

The slider beds are constructed of UHMW, which is very abrasion resistant and has a low coefficient of friction of approximately 0.3 (standard polyurethane).

Slider beds can be provided with or without zinc plated steel C-section for easier installation.

Please refer to catalog B205 for further information and dimensions.

Standard Slider Beds

Version G

Version GC

Standard Slider Beds with Edge Guiding

Version F

Version FC

Standard Slider Beds for ATN Self-Tracking

Version ATN K6

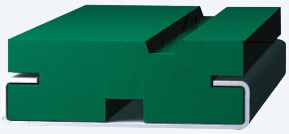

Version ATN K6 C

ORDERING EXAMPLE

Slider Bed ATN K6 C 75 / 2000

Slider Bed Version — ATN K6 C
for Timing Belt Width in mm — 75
Length of Slider Bed in mm — 2000

INDEX

BRECO*flex* CO., L.L.C. PRODUCT CATALOGS

Polyurethane Timing Belts

Metric and English pitches.

See BRECO*flex* **catalog # B212**

Polyurethane Timing Belts with Weld-on Profiles

Dividing, Stepping, Positioning.

See BRECO*flex* **catalog # B203**

Calculations Driving, Positioning, Conveying

Power, Torque, and Peripheral force calculations.

See BRECO*flex* **catalog # B204**

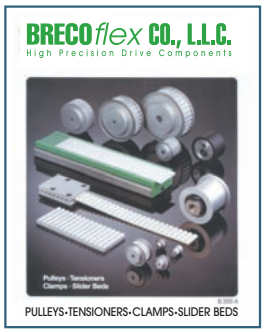

Accessory Items for Polyurethane Timing Belts

Pulleys
Tensioners
Clamps
Slider Beds.

See BRECO*flex* **catalog # B205**

Polyurethane Timing Belts ARC-POWER-BAT10

Circular "ARC" tooth shape.

See BRECO*flex* **catalog # B206**

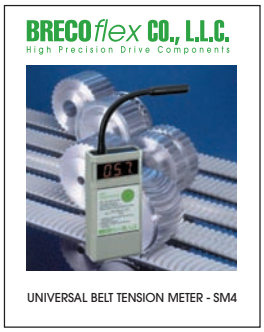

SM4 Tension Meter

Improve performance, lifetime, positioning accuracy, bearing load, and noise level.

See BRECO*flex* **catalog # B207**

Timing Belt Backings

Polyurethane Timing Belts in Metric and English pitches with a wide range of cover materials.

See BRECO*flex* **catalog # B208**

ATN® - Convertible Timing Belt Systems

ATN technology allows the reconfiguration of profiled timing belts at the customer site.

See BRECO*flex* **catalog # B209**

ESBAND Truly Endless Woven Flat Belts

Wide variety of Polyurethane, Neoprene and Silicone state-of-the-art flat belts.

See BRECO*flex* **catalog # B210**

BRECO*flex* CO., L.L.C.

High Precision Drive Components

Printed in USA 8/04

NOVAMAX INDUSTRIAL LLC | 8200 S QUEBEC ST SUITE A-3 | ENGLEWOOD CO 80112 - USA
TOLL FREE 1-800-594-3380 - PHONE 303-470-7226 - FAX 303-470-5773
www.novamaxindustrial.com

PO Box 829 • Eatontown, NJ 07724
Toll Free: 1-888-463-1400 • Tel: 732-460-9500 • Fax: 732-542-6725
www.brecoflex.com • e-mail: info@brecoflex.com